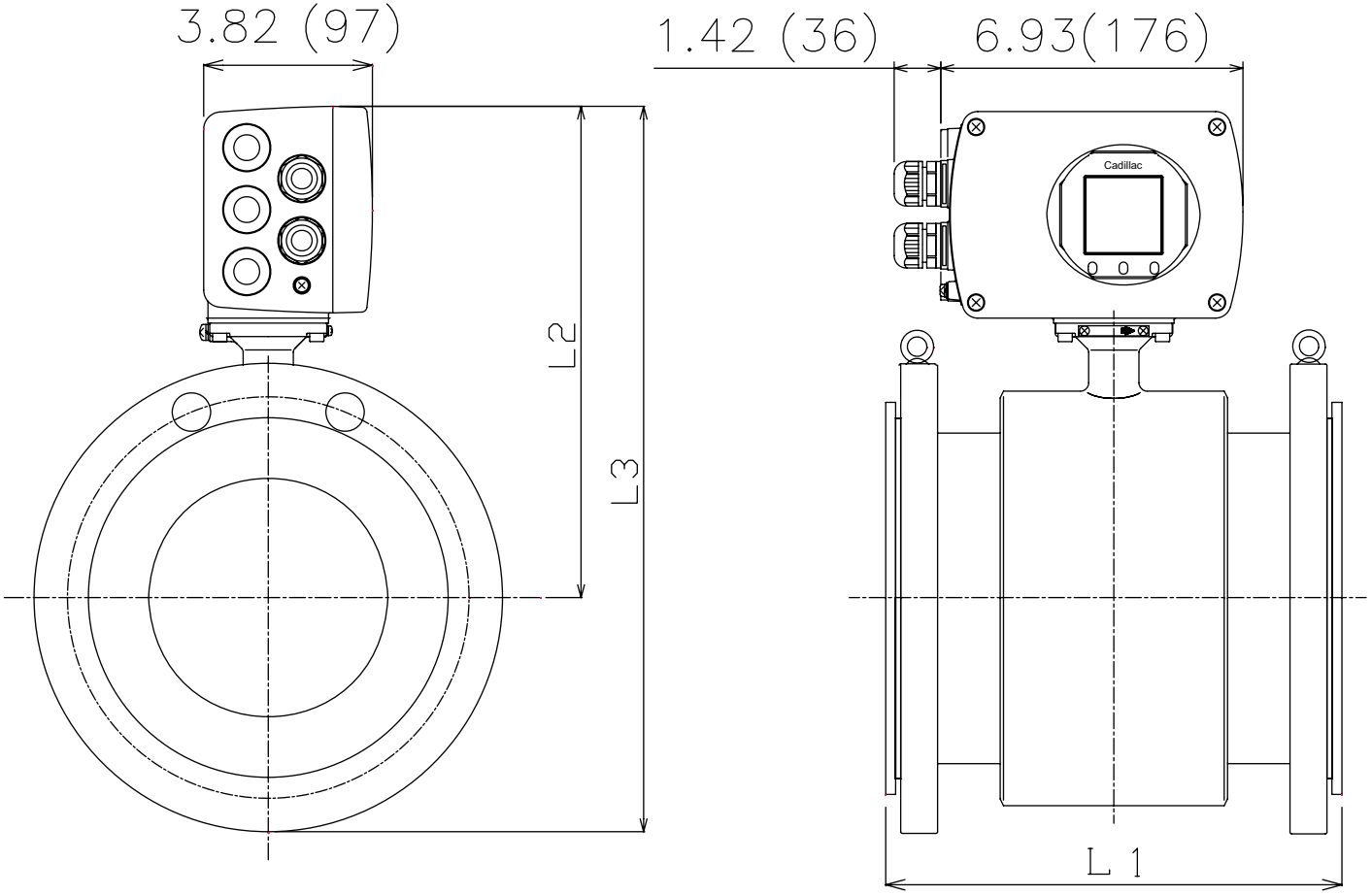Unit: inch (mm)